“How’d they do that?”

ISE 2026
Q-SYS Experience Tour
Technology Deep Dive

Thank you for stopping by the Q-SYS stand at ISE 2026.
This year, we focus on how a singular platform can shape and customize real-time experiences across the high performance workplace, including high impact spaces and the spaces-in-between.

ISE 2026

Lobby/Gameshow

When you step into the world of Q-SYS, you glimpse into what's possible when endless imagination meets the power of Q-SYS Full Stack AV Platform. Your tour started with a game show, just one example of leveraging Q-SYS to create captivating, inspiring, and joyful experiences that can continue throughout your high-performance places.

Full-code customization: How well do you know Q-SYS? Your tour group likely found out as you played through the "QWIZ Show" and competed with others for all the Q-SYS glory. Your experience was at the mercy of your gameshow host, as they had the power to customize the challenge for all contestants. Your host used Q-SYS automation to set the tone for the showdown, adapting the game in real-time based on variables like player count, question difficulty, and game length. Lua programming gives you the ability to trigger events based on custom conditions, so our hosts could fine-tune your game via user control interfaces (UCIs) deployed on Q-SYS touchscreen controllers.

Complete show automation: The custom game system also automated all elements of the production during gameplay, including lighting, video and audio. Game buzzers connected through QIO Series network I/O expanders trigger events automatically, switching the frame for the Q-SYS NC Series NC-Pro15x camera and panning audio around contestants when someone buzzes in. During the QWIZ Show, all scoring and question displays were populated via Q-SYS UCI viewer and coordinated using Q-SYS with other AV elements, such as DMX-controlled lighting changes, sound effects, and BGM, creating an immersive and responsive environment.

Selfie station: Our selfie station used the Q-SYS Plugin for BrightSign digital signage players, along with custom UI on the Q-SYS touch panel to allow guests to capture a memorable moment with one of our Q-SYS celebrities (like Patrick, Nate, or the iconic "Q-SYS Guy").

PL Series loudspeakers: We showcased new white models of PL Series performance loudspeakers which bring a clean aesthetic to well-tuned audio solutions, perfect for modern environments, corporate spaces, hospitality, and houses of worship.

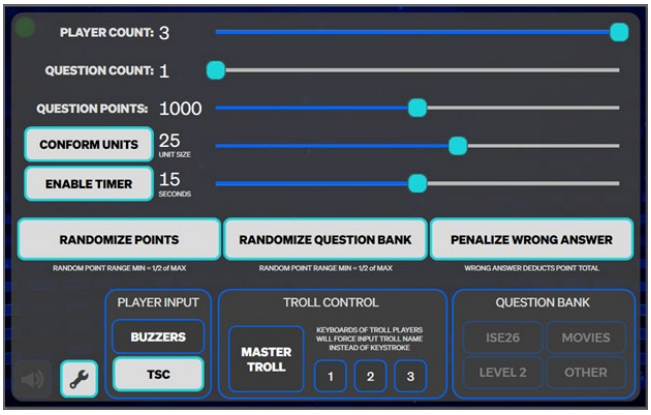

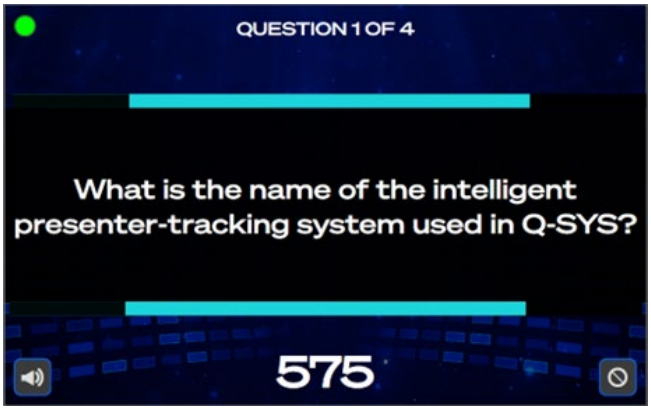

ISE 2026

RoomSuite Modular System Demo

Q-SYS RoomSuite Modular System enables fast, standardized setup for your medium-to-large collaboration spaces. We demonstrated the end result: a live conference room setup that offers bring-your-own-meeting (BYOM) mode and simple management of in-room networked peripherals.

The RoomSuite Modular System

Simplicity of commissioning: We talked through how you can quickly accomplish device discovery, configuration, and management from a single, web-based interface using no-code workflows.

Simplified hardware: Everything needed to configure the Q-SYS RoomSuite Modular System (even the network switch) is consolidated into the RMP-100 processor and QIO-VEN4 expander. These two devices replace the multiple subsystems with a single room processor and support room-specific features with a plug-and-play collaboration portfolio.

User interface personalization: It's easy to personalize the look and feel of the user control interface (UCI) that adjusts your meetings with the Q-SYS RoomSuite Modular System. We demonstrated how easy it is to change the colors to match your brand. And the buttons will accurately reflect your setup because they automatically update to what is connected to the processor and expander.

Customized for your room: The demo showcased how to easily connect and integrate devices from Q-SYS networked collaboration peripherals to tailor each system to your room's specific needs, including Q-SYS microphones, cameras, loudspeakers, and other sensors.

Easy audio, video and control: The RoomSuite Modular System is designed to simplify the adding of microphones, cameras, and other sensors to take in audio, video and control data in many different room configurations, with out-of-the-box support for mic mute sync on both NM-T1 and 3rd party microphones, along with AI-powered camera features like those on the Q-SYS NC Series NC-90-G2.

Simplify BYOM conferencing: Q-SYS RoomSuite Modular System supports any major UC platform, and attendees can also bring whatever meeting platform they prefer. Users can configure Q-SYS TSC Series touchscreens and easily start/join meetings, manage audio/video, share content, and control room settings from a single point.

Room System Optimization: Tune and adjusts the room's audio with no technical setup or audio expertise needed. This means rooms are ready to use right away and every meeting starts with clear, balanced sound that stays consistent over time. By automating audio calibration, IT teams and users save time and avoid troubleshooting.

Management at Scale: With Q-SYS Reflect, you can access real-time information about every connected device for every system, including Q-SYS RoomSuite Modular System rooms and Core-based Q-SYS rooms across your organization. The demo also included a walkthrough of mass configuration, deployment, and firmware updates using Reflect Plus, showing how organizations can save time and keep rooms up to date with minimal effort, making it easy to manage multiple rooms efficiently.

ISE 2026

Q-SYS RoomSuite Modular System Meeting Room

Equipment layout

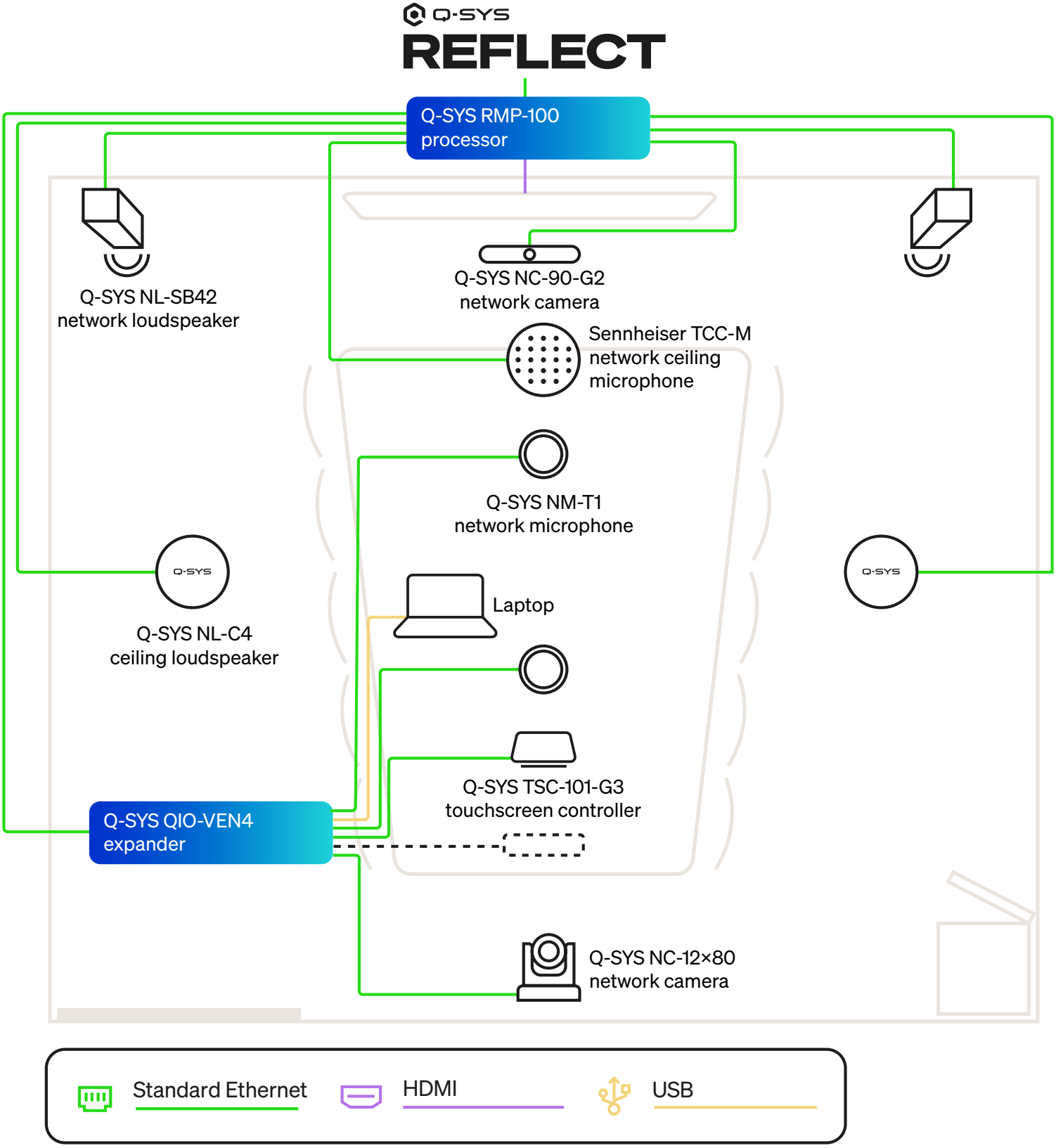

ISE 2026

High-Impact All-hands/Classroom

Q-SYS VisionSuite enhances the experience in high-impact spaces with AI-driven room automation, optimizing remote attendee visibility, audience switching and presenter tracking while simplifying system operations. We demonstrated this with a live presentation that showed just how engaging your all-hands meetings or classrooms can be.

High-Impact Space Features

Full Room Automation: Q-SYS VisionSuite leverages the robust Q-SYS control engine to enable intuitive ways to trigger experience-driving automations. That automated experience is extended with vision-based control, allowing you to, among other things, start / end a presentation hands-free simply by walking into the right place.

Q-SYS Control for UC Platforms: Call controls and the room's AV controls are integrated on a single touchscreen for an intuitive meeting experience, including live camera controls, device power and more. Q-SYS VisionSuite supports Microsoft Teams, Google Meet, and Zoom.

BYOD Support: Simply connect a laptop to any Q-SYS USB endpoint to bridge the room's audio and camera feed for remote attendees to any compatible application.

Automatic camera switching: Camera frames switch automatically and are triggered by audio detection. This unique ability is supported by native Q-SYS network microphones, as well as integrations with several partner microphones.

Presenter Spotlight: Participants will experience dynamic full-body presenter tracking based on advanced computer vision. Autonomous presenter tracking utilizes full-body recognition, enabling fluid and predictive camera motion. This means even if a presenter walks behind another person or obstruction, or turns their head away from the camera, they will still get perfectly framed.

New Q-SYS Cameras: The NC Series network PTZ cameras, including the new NC-Pro15x used during the demonstration, deliver smooth and highly responsive pan, tilt, and zoom actions, ensuring every in-room presenter remains visible to both on-site and remote participants. All NC Series cameras seamlessly integrate through any Q-SYS AV bridging peripheral, instantly bringing video feeds to all major video conferencing applications.

Native Q-SYS AI Acceleration Hardware: We showed how AI drives VisionSuite, powered by the new VSA-100 AI Accelerator, to bring in data from microphones and cameras to create a holistic understanding of where movement is happening in a room.

ISE 2026
High-Impact All-hands/Classroom

Equipment layout

EQUIPMENT RACK

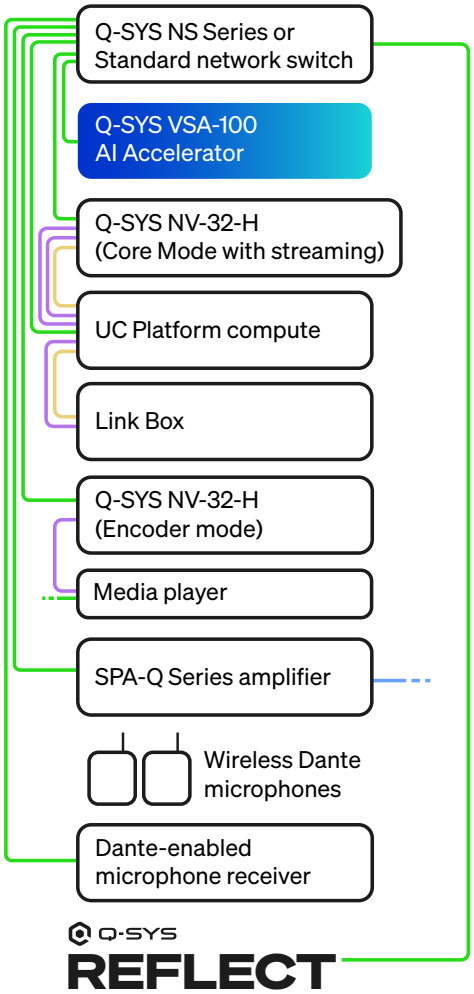

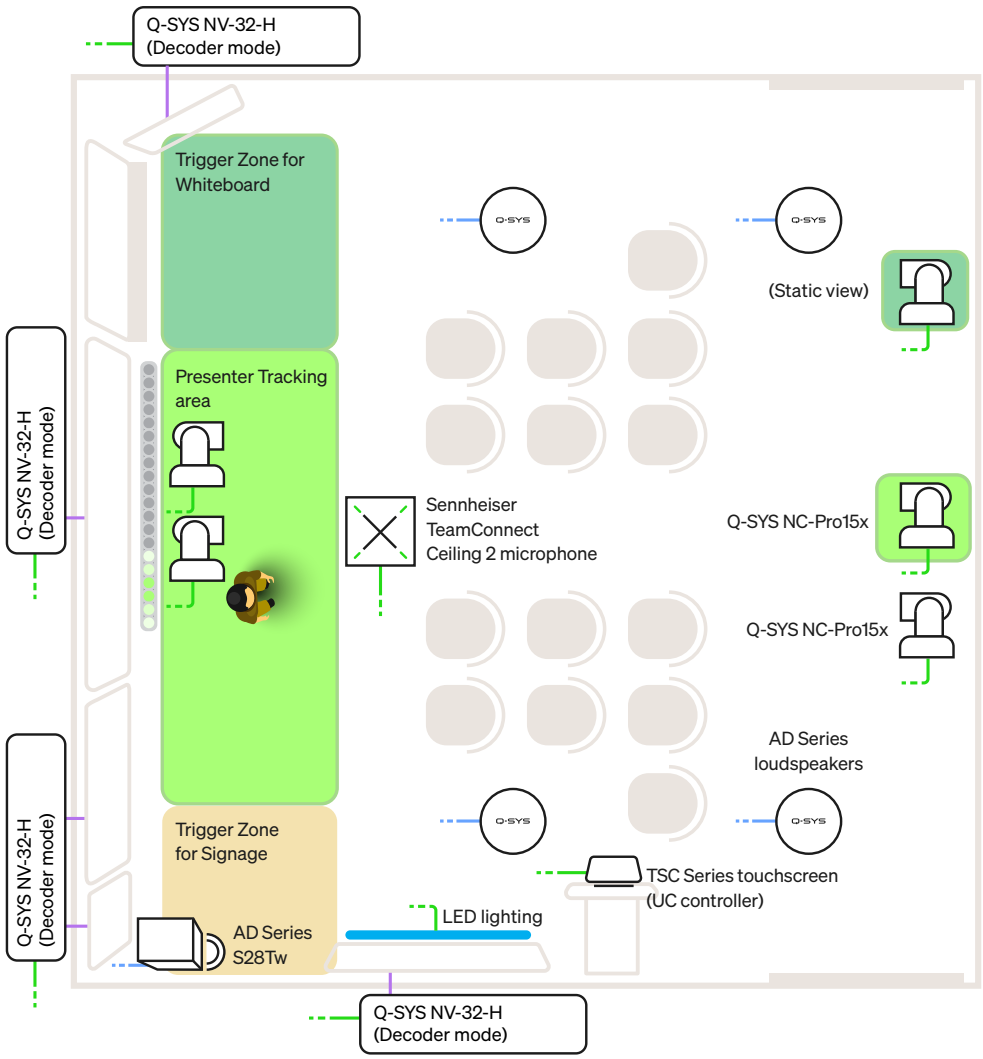

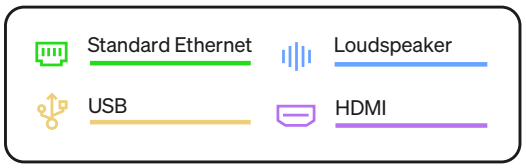

ISE 2026

Network Operations Center

The **Network Operations Center** is the centralized hub for intelligent cloud and data collection via Q-SYS Reflect cloud-based remote monitoring and management. We demonstrated this by taking control and showing the real-time status of the spaces on the network.

The Experience

Q-SYS Reflect is an intrinsic part of the Q-SYS Platform making it easier than ever to make quick decisions and deliver confidence to your users with detailed, real-time system information for every connected device along with alerts and notifications that you can integrate into your daily workflow.

Remote User Control Interface access: Allows you to quickly resolve issues with users in the room and configure your Q-SYS system from anywhere. We demonstrated how much time, and cost, you can save by correcting simple user error (outdoor signage) without sending a technician onsite. And if you were in our coffee shop, you might have seen a remote UCI with a live camera feed.

Third-party integration: Partner plugins make it possible to integrate Q-SYS with third-party products. That includes room occupancy data to give insight into how (and when) spaces are being used so decision makers can ensure projected business outcomes are being met. We integrated occupancy and temperature data from SpaceTi, enhancing our understanding of environmental conditions in real time. We also leveraged a custom dashboard powered by Grafana, made possible through free API connectivity, which allows us to visualize and dynamically act on this data.

Remote Helpdesking: Of course, there are issues that may require 'boots on the ground'. When a Q-SYS Core in the All-hands/ Classroom space showed an error, our tech had the right information to solve the problem quickly with management and control capabilities. Q-SYS uses API integration with ServiceNow to alert support staff through their messaging platform and queue a service ticket.

Leveraging data for better decision making: Q-SYS Reflect is the centralized hub for collecting data to help you make better decisions and we demonstrated that in a few ways:

- **Space Manager:** Space Manager provides a powerful way to visualize and manage your entire AV estate by combining a logical hierarchy of spaces with an interactive global map view. Its advanced visualizations allow you to quickly assess system health, navigate across regions, manage space relationships, and pinpoint issues with ease. Key capabilities include a Hierarchy View that organizes your AV estate and associated data into a clear structure across regions, buildings, floors, rooms, and zones; a Map View that delivers a geospatial snapshot of all AV systems for instant status insights; and status rollups with clustering that surface system problems quickly—eliminating the need to dig into individual systems to identify issues

- **System Reliability:** System Reliability and Reliability Reports provide powerful tools to monitor system performance over time, identify your most and least reliable systems, and generate detailed reliability reports for analysis and export. These capabilities uncover historical trends, enabling informed decisions about space management, budgeting, and future investments. Key features include time-based reliability visualizations for Cores, sorting and filtering by system status over time, and real-time updates to ensure you're always working with the latest data.

- **User Feedback:** You can leverage Q-SYS to gather quick feedback from users to have better insights into the topics of your choice.

ISE 2026
Network Operations Center

Equipment layout

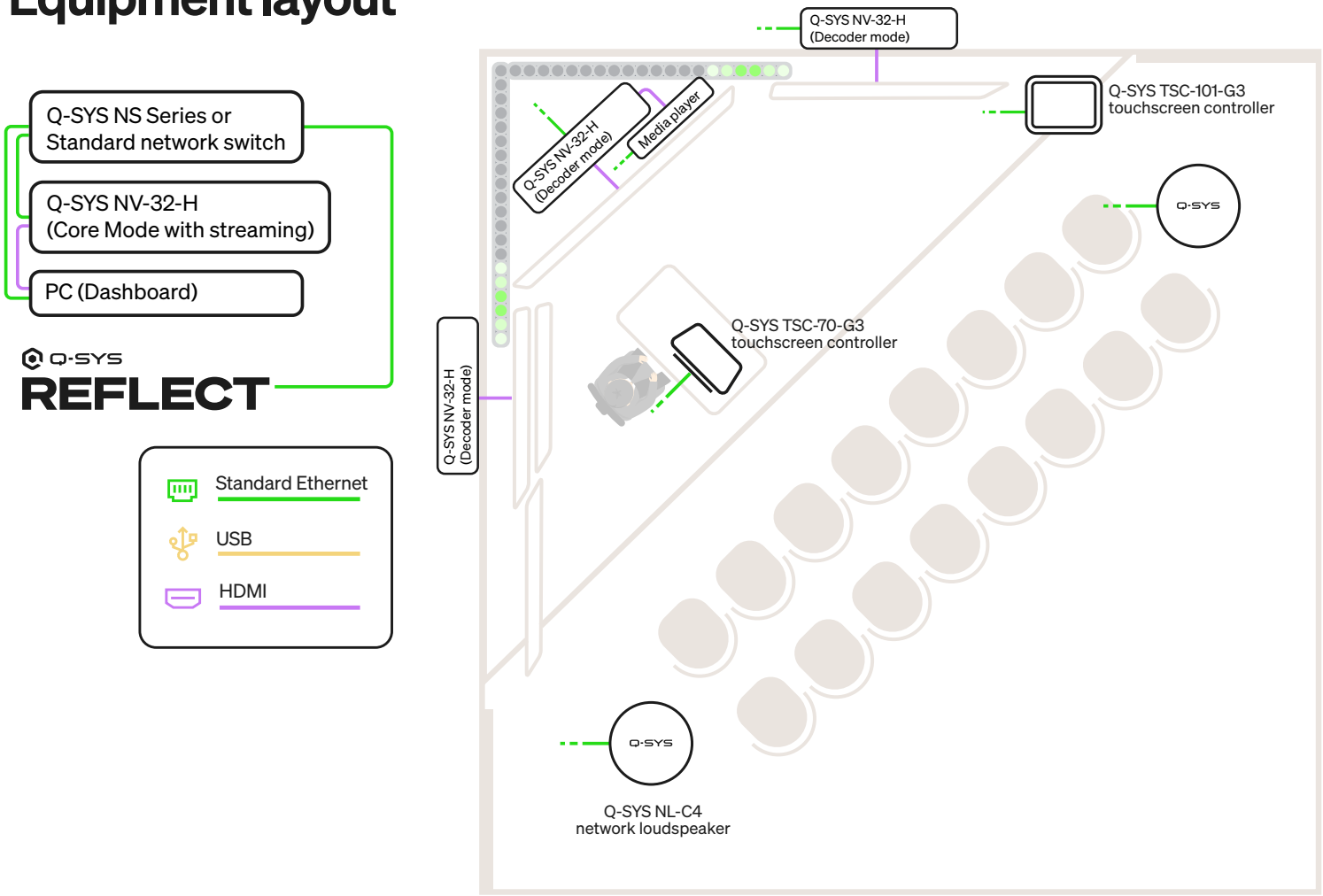

Custom data dashboard within Q-SYS Reflect

ISE 2026

The Spaces In-between

We explored how the Q-SYS Platform connects insight and emotion in some of the communal spaces throughout a building or campus.

The Experience

Fusing multimodal data into action: Using data collected from multimodal sensors around the tour, Q-SYS automates the room's lighting brightness/temperature, air temperature, and volumes in this room. Beyond this room, the system is even optimizing the presentation time of each tour guide based on where each tour is in any given presentation.

Furthermore, since Q-SYS Open allows connection to almost anything, you can allow third-party devices and software access to real-time data and system controls. In this example, the system collected pieces of user data from each room, and then passed that data in real-time via Q-SYS Open API to Suno AI Music generator and to Midjourney to build a custom music track to summarize our guests' journey on the tour, complete with album art and displayed lyrics (displayed with Q-SYS UCI Viewer).

Customized with Q-SYS Open: Q-SYS automated the lighting and air temperature, using Grafana Labs to aggregate environmental data, based on time of day, temperature outside and the number of people on a tour. Additionally, your customized podcast exit music was generated by AI using feedback synthesized from across your tour starting with the QWIZ Show, such as favorite band and overall sentiment throughout the tour. Additionally,

With an open API that allows connection to almost anything, you can allow third-party devices and software access to real-time data and system controls, enabling features like environment adjustments and personalized background music based on user feedback

Flexible Spaces: More corporate campuses are recognizing the importance of engaging their remote audience at an elevated level, so they're installing in-house broadcast studios to host product launches, podcast shows and more. One participant was invited to an impromptu podcast, which was fully automated by Q-SYS with automatic camera switching without the need for additional staff to manage it.

From fully automatic to manual production mode: Sometimes manual camera control is necessary, which happens through the verified SKAARHOJ PTZ Fly controller plugin (found on Q-SYS Library). With the push of a button, the camera operator can control Q-SYS cameras when necessary.

Step into the Big Screen: We demonstrated how a space can transform into a cinematic viewing room at the touch of a button with Q-SYS control and automation, changing the audio, video and lighting to match. For an even more immersive experience, we incorporated spatial audio delivered by Q-SYS PL Series loudspeakers to bring you into the action (literally), culminating in placing you right in the middle of a ridiculous 4D movie trailer equipped with all the sights, sounds, and fog for ultimate immersion.

ISE 2026
Spaces in-between

Equipment layout

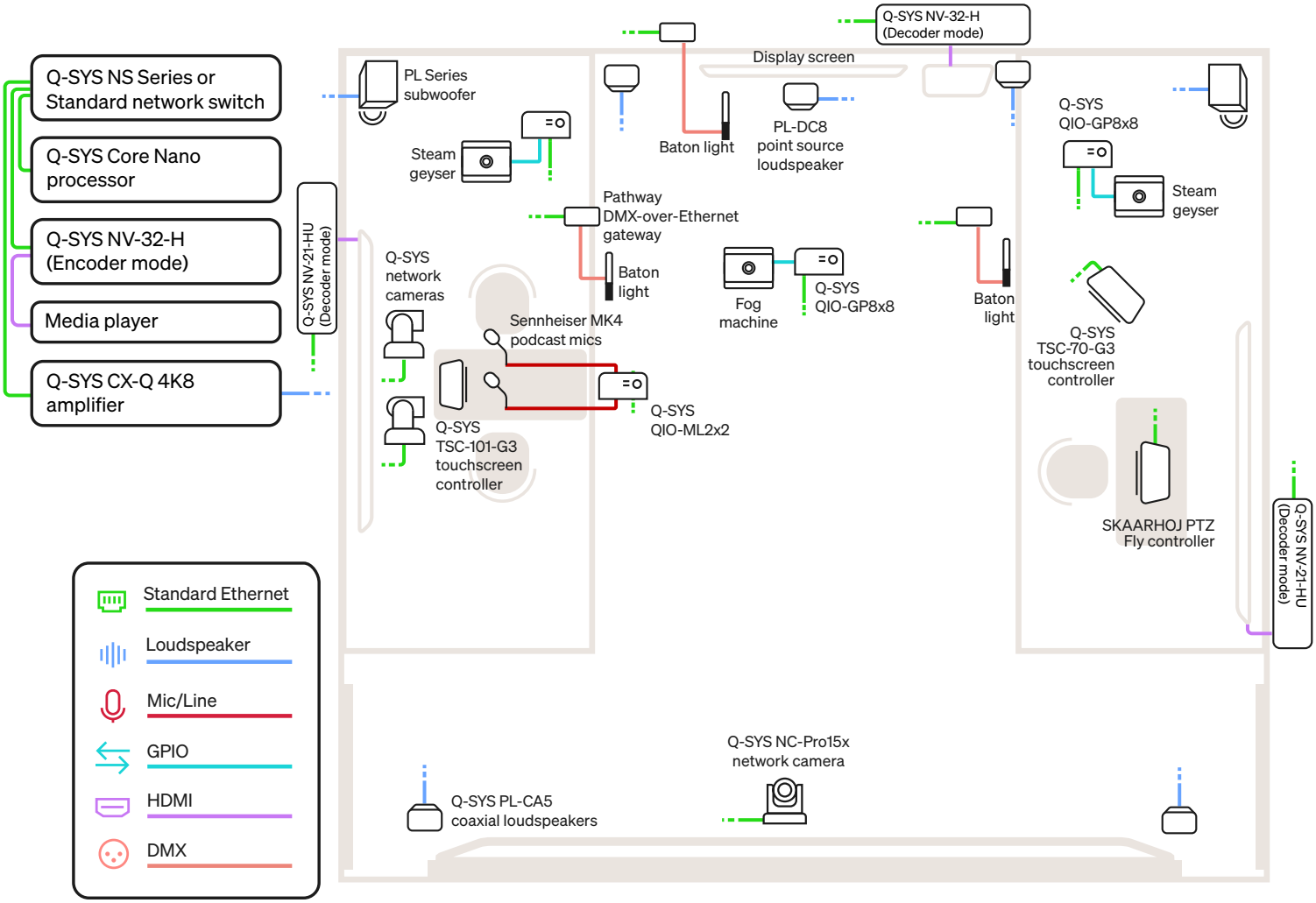

ISE 2026
Q-SYS Products & Solutions

Click on a series to learn more

Q-SYS Core Processors

Q-SYS REFLECT Remote Monitoring & Management

Q-SYS Reflect cloud monitoring and management

Q-SYS RoomSuite Modular System

Q-SYS VISIONSUITE

Q-SYS VisionSuite

NC Series PTZ Cameras

NV Series Network Video Endpoints

AcousticDesign™ Series Installation Loudspeakers

NL Series Network Loudseakers

TSC-G3 Series Touch Screen Controllers

NM Series Network Microphone

QIO Series Network I/O expanders

PL Series Performance Loudspeakers

Select models coming soon in white

Explore Further

Intro to Q-SYS

Intro to Q-SYS Control

Q-SYS Alliances & Technology Partners

Q-SYS Solutions for:

Collaboration Spaces

Higher Education

Hospitality

Performance Venues

Retail

Themed Entertainment

© 2026 QSC, LLC all rights reserved. QSC, LLC's trademarks include but are not limited to Q-SYS™, Q-SYS logo, and all trademarks are listed under www.qsc.com/trademarks, some of which are registered in the U.S. and/or other countries. All other trademarks are the property of their respective owners.

1675 MacArthur Boulevard • Costa Mesa, CA 92626 • Ph: 800/854-4079 or 714/957-7100 • Fax: 714/754-6174

qsys.com